CMC TECHNOLOGIES
PTY LIMITED ACN: 085 991 224, ABN: 47 085 991 224
Engineering & Industrial Instrumentation
Phone: +61 2 9669 4000
Fax: +61 2 9669 4111
Email: sales@cmctechnologies.com.au
Web Site: http://www.cmctechnologies.net.au
Unit 19, 77 Bourke Road,
Alexandria, NSW, 2015
AUSTRALIA

For Pressures up to 3000 PSIG @100°F

Glass-Trac Transparent Gages use clear, see-through glass on both sides so that both the color and the interface of liquids can be viewed. Transparent glass is flat on both sides. Level indication depends on the color of the liquid. Transparent gages have flat glass on both sides of the chamber to allow sufficient light to enhance viewing. Illuminators are used to supplement ambient light. Since transparent glass is flat on both sides, the glass may be shielded by Mica or PCTFE (Kel-F ®). Specify transparent gages where:

- Liquid-liquid interface must be viewed;
- Shields to protect the glass must be used;
- Steam above 350 PSIG (2413 KPa) is to be gaged, using mica shields;
- Liquid viscosity may foul reflex prisms.

Transparent Gages are made in three pressure series (maximum 3000 psig @ 100°F) and are tapped for ½" or ¾" NPT connections. The standard Glass-Trac level gages are designed for -20°F service.

On Glass-Trac Transparent Close Hook-up Gages with ½" NPT connections, the center-to-center dimension is the same as the overall length on standard gages. On Close Hook-up Gages with ¾" NPT connections the center-to-center dimension is the same as the overall length on standard gages plus 3/8 ".

Typical Transparent Top/Bottom

Typical Transparent Close Hook-Up

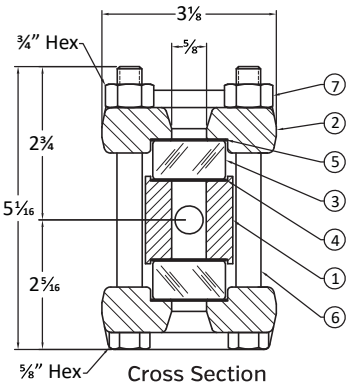

Cross Section Low Pressure

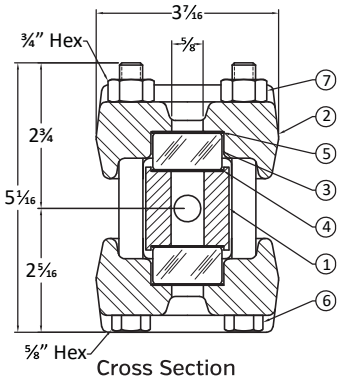

Cross Section Mid/High Pressure

Standard Bills of Material					
Item	Part	Carbon Steel	Low Temp To -5° F	Stainless Steel Parts in Contact	Stainless Steel All Metal Parts
1	Liquid Chamber	SA-696 Grade C	SA-350 LF2	SA-276 Type 316	
2	Cover	SA-105	SA-350 LF2	SA-105	SA-182 Type 316 or SA-276 Type 316
3	Glass	Tempered Borosilicate (Aluminosilicate above 602° F)			
	Shield	Mica or PCTFE			
4	Gasket	Garlock® IFG 5500			
5	Cushion	Garlock® IFG 5500			
6	Bolt	SA-193 B7M Alloy Steel			SA-193 B8M
7	Nut	SA-194 2HM Alloy Steel			SA-194 8M

SIZE & DIMENSIONS

End Connections & Close Hook-Up

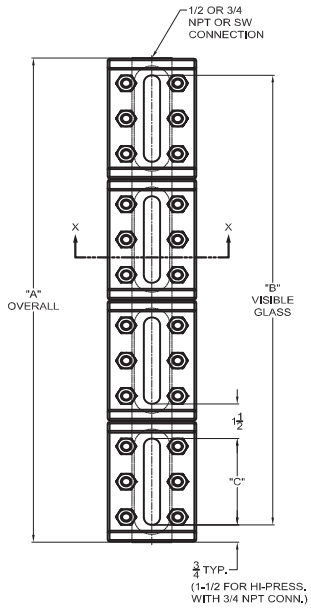

STANDARD
END CONNECTED

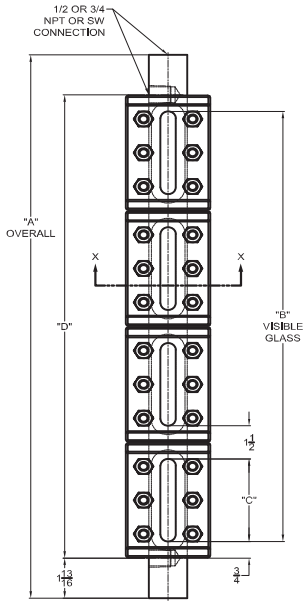

CLOSE HOOK-UP
SIDE CONNECTED

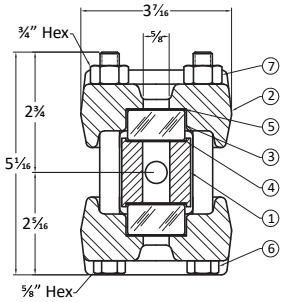

Series TM/TH Cross Section

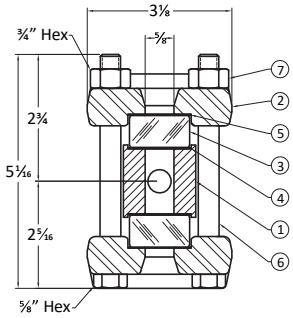

Series TL Cross Section

TRANSPARENT GAGES

SIZE & WEIGHTS											
SIZE NUMBERS			OVER-ALL LENGTH (IN.)			VISIBLE GLASS (IN.) B	GLASS SIZE (IN.) C	CLOSE HOOK-UP CENTER-TO-CENTER (IN.)		APPROX. WT. (LBS)	
LOW PRESS.	MID PRESS.	HIGH PRESS.	A (STD)* ½" OR ¾" NPT	A (CH) ½" NPT	A (CH) ¾" NPT			D ½" NPT	D ¾" NPT	LOW PRESS.	MID-HIGH PRESS.
SINGLE-SECTION GAGE											
11TL	11TM	11TH	5.25	8.875	9.25	3.75	3.75	5.25	5.625	10	12
21TL	21TM	21TH	6.25	9.875	10.25	4.75	4.75	6.25	6.625	11	14
31TL	31TM	31TH	7.25	10.875	11.25	5.75	5.75	7.25	7.625	14	17
41TL	41TM	41TH	8.25	11.875	12.25	6.75	6.75	8.25	8.625	16	19
51TL	51TM	51TH	9.375	13	13.375	7.875	7.875	9.375	9.75	17	21
61TL	61TM	61TH	10.625	14.25	14.625	9.125	9.125	10.625	11	19	24
71TL	71TM	71TH	11.75	15.375	15.75	10.25	10.25	11.75	12.125	21	27
81TL	81TM	81TH	13.375	17	17.375	11.875	11.875	13.375	13.75	24	30
91TL	91TM	91TH	14.125	17.75	18.125	12.625	12.625	14.125	14.5	26	32
TWO-SECTION GAGE											
32TL	32TM	32TH	14.5	18.125	18.5	13	5.75	14.5	14.875	27	33
42TL	42TM	42TH	16.5	20.125	20.5	15	6.75	16.5	16.875	32	38
52TL	52TM	52TH	18.75	22.375	22.75	17.25	7.875	18.75	19.125	36	43
62TL	62TM	62TH	21.25	24.875	25.25	19.75	9.125	21.25	21.625	40	49
72TL	72TM	72TH	23.5	27.25	27.5	22	10.25	23.5	23.875	43	54
82TL	82TM	82TH	26.75	30.375	30.75	25.25	11.875	26.75	27.125	50	61
92TL	92TM	92TH	28.25	31.875	32.25	26.75	12.625	28.25	28.625	51	64
THREE-SECTION GAGE											
63TL	63TM	63TH	31.875	35.5	35.875	30.375	9.125	31.875	32.25	59	73
73TL	73TM	73TH	35.25	38.875	39.25	33.75	10.25	35.25	35.875	63	80
83TL	83TM	83TH	40.125	43.75	44.125	38.625	11.875	40.125	40.5	75	92
93TL	93TM	93TH	42.375	46	46.375	40.875	12.625	42.375	42.75	78	97
FOUR-SECTION GAGE											
74TL	74TM	74TH	47	50.625	51	45.5	10.25	47	47.375	85	107
84TL	84TM	84TH	53.5	57.125	57.5	52	11.875	53.5	53.875	100	122
94TL	94TM	94TH	56.5	60.125	60.5	55	12.625	56.5	56.875	104	129
FIVE-SECTION GAGE											
75TL	75TM	75TH	58.75	62.375	62.75	57.25	10.25	58.75	59.125	106	134
85TL	85TM	85TH	66.875	70.5	70.875	65.375	11.875	66.875	67.25	124	152
95TL	95TM	95TH	70.625	74.25	74.625	69.125	12.625	70.625	71	129	161

*3/4" NPT Tapped High Pressure Gages Add 1-1/2" to 'A' Dimension

MODEL CODE BREAKDOWN & PRESSURE RATINGS

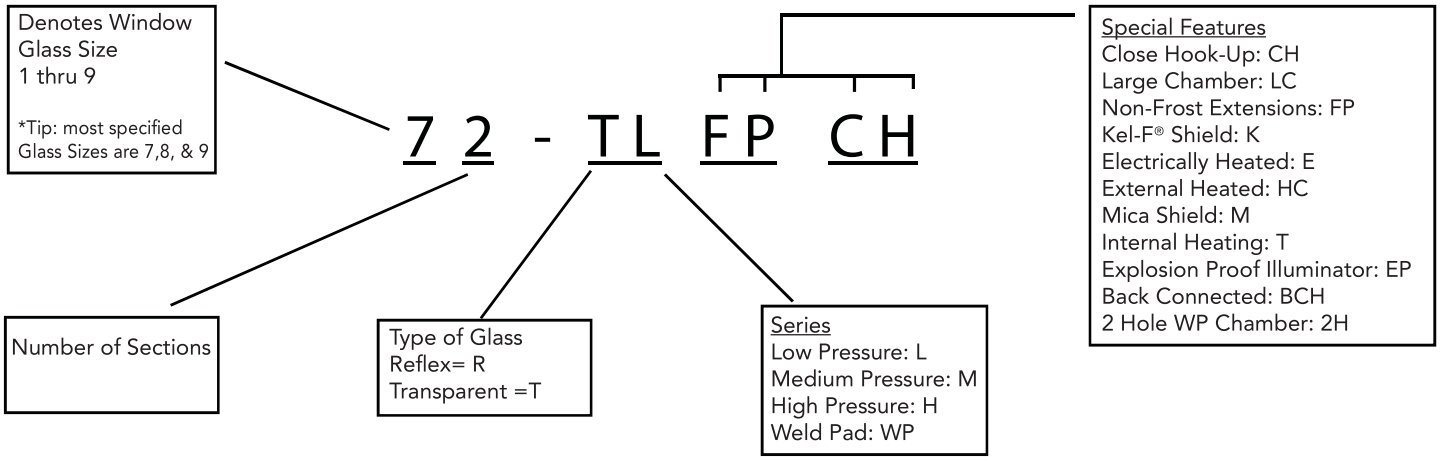

Low Pressure - Series TL - Rating PSIG

Glass Size	100° F	200° F	300° F	400° F	500° F	600° F	700° F
1	2000	1935	1870	1790	1660	1480	1260
2	1815	1750	1690	1620	1510	1340	1150
3	1630	1580	1520	1460	1360	1210	1050
4	1440	1390	1340	1290	1200	1060	900
5	1250	1210	1170	1120	1040	920	790
6	1065	1030	995	950	890	790	680
7	875	845	815	785	730	645	550
8	690	665	645	620	575	510	440
9	500	480	465	445	415	370	320

Borosilicate (standard) Glass up to 600°F (316°C).
Aluminosilicate Glass 600-800°F (316-427°C).
Saturated steam rating 350 PSIG WSP.

Medium Pressure - Series TM - Rating PSIG

Glass Size	100° F	200° F	300° F	400° F	500° F	600° F	700° F
1	2500	2420	2340	2240	2080	1850	1580
2	2315	2250	2170	2090	1940	1720	1740
3	2130	2060	1990	1910	1770	1575	1340
4	1940	1875	1810	1740	1620	1435	1230
5	1750	1690	1630	1570	1460	1295	1100
6	1565	1510	1460	1400	1305	1160	990
7	1375	1330	1280	1230	1145	1015	870
8	1190	1150	1110	1065	990	880	750
9	1000	970	935	895	835	740	630

High Pressure - Series TH - Rating PSIG

Glass Size	100° F	200° F	300° F	400° F	500° F	600° F	700° F
ALL	3000	2920	2850	2780	2600	2310	1970

Technical Notes:
- Pressure rating is determined by glass size for Series TL and TM.
- Series TH is designed with cross members, allowing uniform pressure ratings for all glass sizes.
- For Glass-Trac Transparent Gages used in non ASME Sec 1 steam service, the maximum working steam pressure rating is 350 psig.
- Saturated steam applications above 350 psig need to be specified using Steam-Trac Series.
- Pressure-temperature above 4000 PSIG @ 250°F refer to 6K Series Gages.
- Consult Factory for temperatures above 800°F.