/ Installation guideline Explosion Isolation Flap Valve REDEX® Flap

/ Function diagram

Basic Position

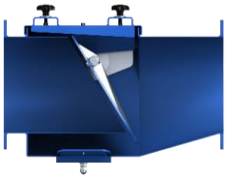

In operation

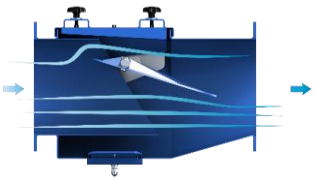

In case of an explosion

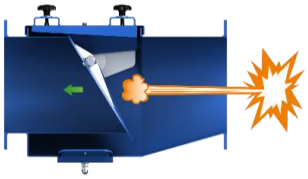

/ Highlights

/ Pressure resistant design
/ Certified safety system for pull applications according to EN 16447:2014 (3.4)
/ Position indication for basic and locked position (inductive)
/ Flanges according to DIN 24254 part 2
/ Mechanical locking device

/ Certified for

Zone inside: Ex II 1D / zone 20, 21, 22
Zone outside: The outside zone is depending on the execution of the attached parts or rather switches.

/ Description

Function	Installation position
for organic dust, single acting	horizontal

/ Technical data

Maximal air speed: 35m/s

		Nominal size							
		DN140	DN160	DN200	DN250	DN280	DN315	DN355	DN400
Test certificate FSA (year) ATEX (no.)		14/1653X	14/1653X	14/1653X	14/1653X	14/1653X	14/1653X	14/1653X	14/1653X
Explosion pressure at 20°C	P_{red}, bar	1.1	1.1	1.1	1.1	1.1	1.1	1.1	1.1
Organic dust									
max. K-Value	bar x m x s^{-1}	230	230	230	230	230	230	230	230
Installation distance	min. m	1	1	1	2.5	2.5	2.5	2.5	2.5
	max. m	8	8	8	7	7	7	7	7
Organic dust									
max. K-Value	bar x m x s^{-1}	300	300	300	-	-	-	-	-
Installation distance	min. m	2.5	2.5	2.5	-	-	-	-	-
	max. m	8	8	8	-	-	-	-	-

/ Pressure drop

Pressure drop in Pa		Nominal size							
		DN140	DN160	DN200	DN250	DN280	DN315	DN355	DN400
Air speed in m/s	10	205	190	175	170	175	185	205	230
	15	250	235	215	215	220	235	260	300
	20	290	270	250	250	260	280	310	360
	25	325	300	280	285	295	320	355	415
	30	355	330	310	315	330	355	400	465

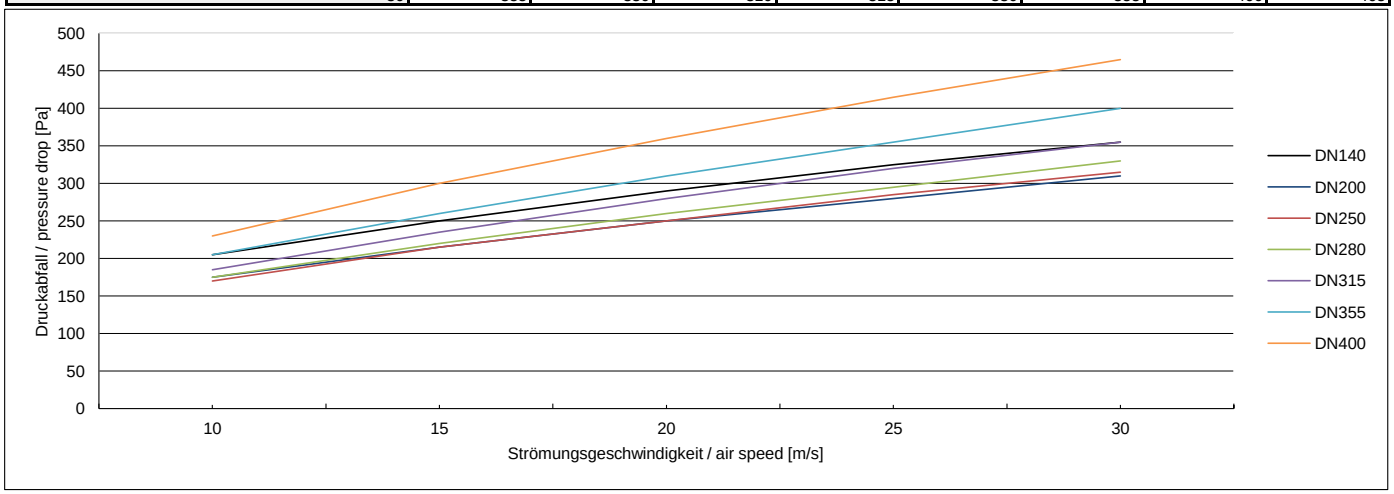

CMC TECHNOLOGIES
PTY LIMITED ACN: 085 991 224, ABN: 47 085 991 224
Engineering & Industrial Instrumentation
Phone: +61 2 9669 4000
Fax: +61 2 9669 4111
Email: sales@cmctechnologies.com.au
Web Site: http://www.cmctechnologies.net.au
Unit 19, 77 Bourke Road,
Alexandria, NSW, 2015
AUSTRALIA

/ Installation guideline Explosion Isolation Flap Valve REDEX® Flap

/ Requirements to the installation situation

Installation situation	Requirements and notes
Pull application according to EN 16447:2014 (3.4)	The certification of this back flap is valid vor pull applications. 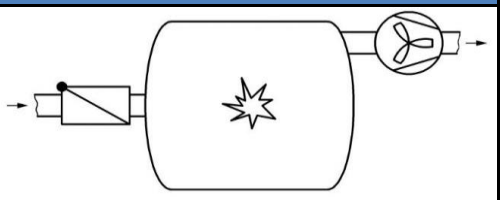 Source: EN 16447:2014 (3.4)
Operating temperature	Maximum/minimum operating temperature: - 20°C...+70°C (higher temperatures according to attached parts). At operating temperatures < +1°C it has to be ensured that the back flap cannot freeze. A frozen mechanism affects the proper function of the back flap negatively.
Pipe in front of the valve (in air flow direction)	In front of the back flap a straight pipe has to be installed (min. 5x DN). Exeption: nominal size DN140, DN160 and DN200 for this nominal sizes has the minimal installation distance priority..
Pipe after the valve (in explosion direction)	It is allowed to install the back flap at the pipe end. If a pipe section follows after the back flap, it must make sure that this resist to a pressure of PN1. If the pipe relieves, there must be a distance of minimum 5x DN between the relief and the back flap.
Process conditions	**The intended use of the back flap valve has to be ensured in every case** In case of charging with dust it must always be secured, that during operation the closiong device is never vitiated, so the following applies: / The air speed in the valve must be min. 12m/s and max. 35m/s on charging with dust. Sedimented dust is not allowed. / The air must be dry so that no condensation is formed. / The maximum dust charged in the medium flowing through the valve is 100g/m^3. / Following commissioning, the service interval must be short (3-5) days. Given correct function the interval can be increased as per the maintenance instructions from the manual. When using dusts which have the risk to bake-on, the right measures to avoid this have to be taken. This evaluation has to be done by the user or rather customer or an expert. RICO Sicherheitstechnik AG is able to support with its knowledge. The dust should not cause deposits, bake-on which can block the valve and avoid proper closing of it. Deposits and bake-on should be removed by the air flow in normal operation. If this is not the case organizational and/or design measures have to be taken: / Reduction of dust load: lower dost load reduces the risk of dust deposit and bake-on. / Reduction of air speed: lower air speed reduces the risk of dust deposit and bake-on. / Reduction of moisture content of the dust: if the dust is dryer the risk of bake on and deposit is lower. / Elimination of solid particles. / Shorten service intervals: The manual removal of dust deposit before it causes blockage of the closing mechanism. / Design Measure: regular shake off of the dust with a vibrator. If none of the measurements can't be taken, which ensure the intended use, please switch to another product of RICO Sicherheitstechnik AG (REDEX® Slide, RICO Slide Valve RSV). Pleas pay attention that those are active components (sensors, detectors and control unit needed). The replacement of a back flap valve is subject to costs.
Support	We recommend to seperately stabilize the back flap in the pipe. It must make sure that the installation of the back flap is tensionless.
Maintenance area	To reach the back flap (particulary the inspection doors) for maintaining, there must planed enough space. Please note the dimensional drawing of the back flap.

CMC TECHNOLOGIES
PTY LIMITED ACN: 085 991 224, ABN: 47 085 991 224
Engineering & Industrial Instrumentation
Phone: +61 2 9669 4000
Fax: +61 2 9669 4111
Email: sales@cmctechnologies.com.au
Web Site: http://www.cmctechnologies.net.au
Unit 19, 77 Bourke Road,
Alexandria, NSW, 2015
AUSTRALIA

/ Installation guideline Explosion Isolation Flap Valve REDEX® Flap

/ Dimensions

Dimension		Nominal size							
		DN140	DN160	DN200	DN250	DN280	DN315	DN355	DN400
Length	L1	420	440	440	590	620	620	620	620
Width	B1	314	334	374	466	496	531	571	616
Threads position	B2	110	130	170	220	250	285	325	370
Height	H1	274.5	284.5	322.5	396.5	426.5	461.5	501.5	546.5
Height (cover open)	H2	531	561	639	808	868	938	1018	1108
Threads position	H3	120	130	150	196	211	228.5	248.5	271
Distance	H4	10	10	10	10	10	10	10	10
Flange diameter	D1	212	232	273	323	363	398	438	484
Flange thickness	S	6	6	6	6	8	8	8	8
Pitch circle diameter	TK	182	200	241	292	332	366	405	448
Quantity of the holes	n	8	8	8	8	8	8	8	12
Hole diameter	D2	11.5	11.5	11.5	11.5	11.5	11.5	11.5	11.5
Pitch	α	45°	45°	45°	45°	45°	45°	45°	45°
Hole diameter	D3	11.5	11.5	11.5	11.5	11.5	11.5	11.5	11.5
Weight (net)	kg	21	22	23	48	55	59	65	71

Sketch

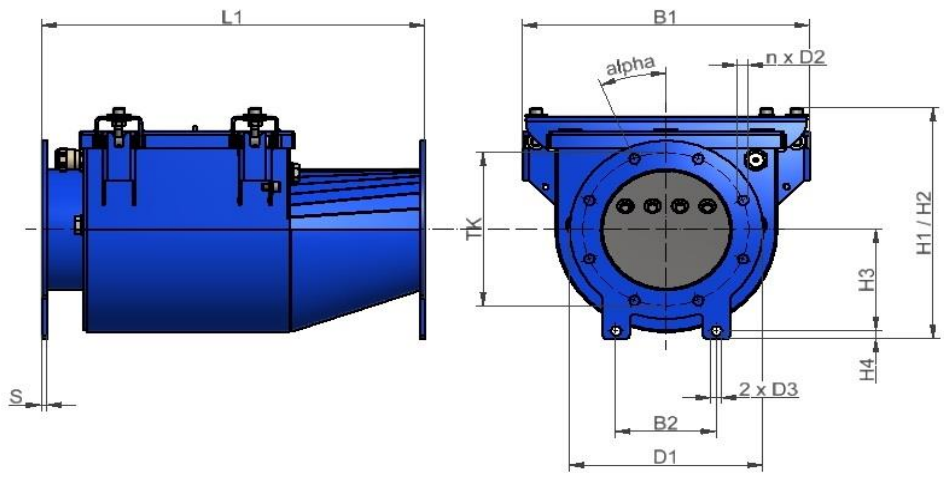

RICO Sicherheitstechnik AG reserves the right to make technical changes or modify the contents of this document without prior notice.

CMC TECHNOLOGIES
PTY LIMITED ACN: 085 991 224, ABN: 47 085 991 224
Engineering & Industrial Instrumentation
Phone: +61 2 9669 4000
Fax: +61 2 9669 4111
Email: sales@cmctechnologies.com.au
Web Site: http://www.cmctechnologies.net.au
Unit 19, 77 Bourke Road,
Alexandria, NSW, 2015
AUSTRALIA

RICO Sicherheitstechnik AG
St. Gallerstrasse 26 / CH-9100 Herisau / Switzerland
T +41 (0)71 351 10 51 / F +41 (0)71 351 10 52
www.rico.ch / info@rico.ch

rico CERTIFIED SAFETY

/ Installation guideline Explosion Isolation Flap Valve REDEX® Flap

/ Function

Basic position

In operation

In case of an explosion

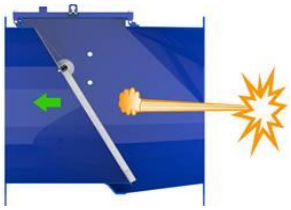

/ Advantages

/ Explosion pressure shock resistant design
/ Certified safety system for pull applications according to EN 16447:2014
/ Position indication for basic position and locked position with inductive switches
/ Flanges according to DIN 24154 class 2
/ Mechanical locking device

/ Certification

Zone inside: Ex II 1D / zone 20, 21, 22
Zone outside: Ex II 2D / zone 21, 22

/ Description

Function	Installation position
for organic dust, single acting	horizontal

/ Technical data

Max. air speed against explosion direction = 35m/s
Min. closing pressure of the flap valve ≥ 0.05 bar

		Nominal size				
		DN450	DN500	DN560	DN630	DN710
Test certificate ATEX		GEX 19 ATEX 1000X				
Maximum explosion pressure in the vessel at 20°C	$p_{red\ max}$ [barg]	0.95	0.77	0.77	0.77	0.77
Maximum explosion pressure on the Explosion Isolation Flap Valve	$p_{ex\ max}$ [barg]	1.46	1.03	1.03	1.03	1.03
Organic dust with K_{St}	**bar m s-1**	≤ 250	≤ 250	≤ 250	≤ 250	≤ 250
Installation distance for vessel size	min. m	3.5	-	-	-	-
0.7 m³ ≤ V ≤ 100 m³	max. m	9.5	-	-	-	-
Installation distance for vessel size	min. m	3.5	3.5	3.5	3.5	3.5
2.77 m³ ≤ V ≤ 100 m³	max. m	9.5	9.5	9.5	9.5	9.5

MESG: ≥ 1.37 mm
The certification tests have been performed with corn starch (MIT = 380°C and MIE = 3 mJ with inductance in the ignition circuit).

/ Pressure drop

Pressure drop [Pa]		Nominal size				
		DN450	DN500	DN560	DN630	DN710
Air speed [m/s]	10	301.7	310.8	321.3	333.5	341.5
	15	333.4	355.1	374.2	392.1	411.9
	20	357.8	384.5	415.2	442.8	470.5
	25	378	414.8	451.1	489.7	521.6
	30	395.4	439.1	485.3	521.9	567.4

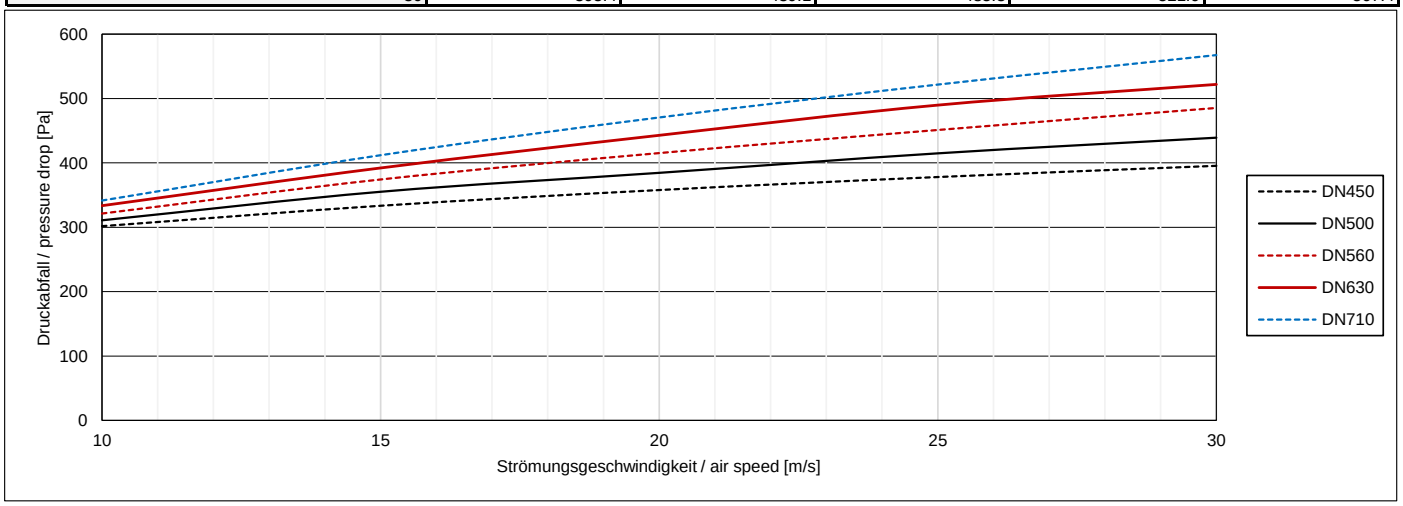

CMC TECHNOLOGIES
PTY LIMITED ACN: 085 991 224, ABN: 47 085 991 224
Engineering & Industrial Instrumentation
Phone: +61 2 9669 4000
Fax: +61 2 9669 4111
Email: sales@cmctechnologies.com.au
Web Site: http://www.cmctechnologies.net.au
Unit 19, 77 Bourke Road,
Alexandria, NSW, 2015
AUSTRALIA

RICO Sicherheitstechnik AG
St. Gallerstrasse 26 / CH-9100 Herisau / Switzerland
T +41 (0)71 351 10 51 / F +41 (0)71 351 10 52
www.rico.ch / info@rico.ch

rico CERTIFIED SAFETY

/ Installation guideline Explosion Isolation Flap Valve REDEX® Flap

/ Requirements on the installation situation

Installation situation	Description and requirements
Pull application according to EN 16447:2014 (3.4)	The certification of this flap valve is valid for pull applications. 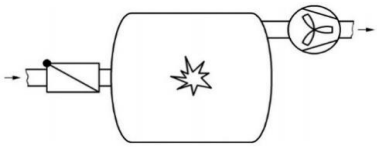 Source: EN 16447:2014
Vessel	The applicable volume of the attached vessel is ≥ 0.7 m^3 or rather ≥ 2.77 m^3. The back flap valve can just be used in combination with vented vessels which are equipped with non-reclosable venting devices.
Operating temperature	Minimum/maximum operating temperature: +1°C...+100°C. At operating temperatures < +1°C it has to be ensured that the flap valve cannot freeze. A frozen mechanism affects the proper function of the flap valve negatively. The process temperature simultaneously determines the maximum surface temperature of the REDEX® Flap on the housing. For a zone 21 or 22 in the outdoor area, this must therefore be taken into account.
Pipes	Elbows are allowed between the explosion source and the flap valve, the pressure resistance of the pipeline must be designed for the applied protection concept. If there is a pipe connection to other equipment on the side of the flap valve opposite to the explosion source, a straight pipe with a length of at least five times the nominal diameter must be installed (at least 5 x DN).
Process conditions	**The intended use of the back flap has always to be ensured.** Further information can be found in the operation instructions.
Support	It is recommended to support the flap valve separately from the pipe. It has to be ensured that the valve is installed without tension.
Maintenance area	For the maintenance there has to be a good accessibility to the flap valve. Especially there has to be enough space to open the housing cover completely.

/ Dimensions

Dimensions [mm]		Nominal size				
		DN450	DN500	DN560	DN630	DN710
Length	L1	661.0	714.0	796.0	826.0	856.0
Width	B1	642.0	707.0	772.0	837.0	902.0
Width fixation	B2	340.0	370.0	400.0	440.0	480.0
Height	H1	635	700	760	845	925
Height (cover open)	H2	937.4	1022.3	1122.2	1237.0	1346.9
Height fixation	H3	275.0	310.0	345.0	395.0	435.0
Flange diameter	D1	534.0	584.0	664.0	734.0	814.0
Flange thickness	S	8.0	8.0	8.0	8.0	8.0
Pitch circle diameter	TK	497.0	551.0	629.0	698.0	775.0
Quantity of holes	n	12	12	16	16	16
Hole diameter	D2	11	11	13.5	13.5	13.5
Pitch	α	15	15	11.25	11.25	11.25
Hole diameter	D3	11	11	11	11	11
Weight (net)	kg	90.0	100.0	120.0	140.0	150.0

Sketch

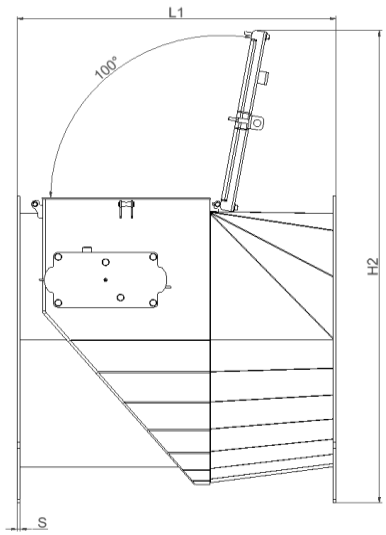

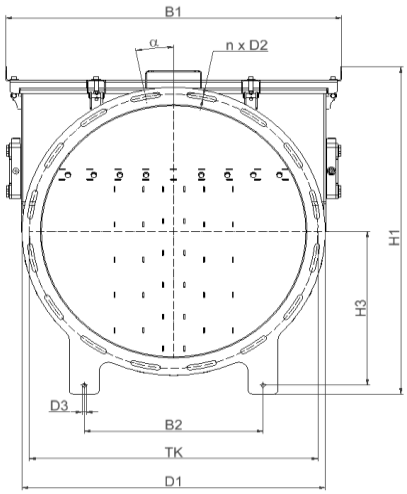

CMC TECHNOLOGIES
PTY LIMITED ACN: 085 991 224, ABN: 47 085 991 224
Engineering & Industrial Instrumentation
Phone: +61 2 9669 4000
Fax: +61 2 9669 4111
Email: sales@cmctechnologies.com.au
Web Site: http://www.cmctechnologies.net.au
Unit 19, 77 Bourke Road,
Alexandria, NSW, 2015
AUSTRALIA